EXAMGOOD

QUESTION & ANSWER

Exam Good provides update free of charge in one year!

Accurate study guides

High passing rate!

http://www.examgood.com

Exam : **070-218**

Title : Managing a Microsoft Windows 2000 Network Environment

Version : DEMO

1.You are the administrator of some of your company's file servers. Peter is hired as an intern in the human resources (HR) department. Peter needs access to some HR files. He also needs to be able to read the file named Handbook.doc, but he must not be able to make changes to it. Handbook.doc exists in a folder named HRResources. Peter needs to have Read and Modify permissions for the other files in the HRResources folder. Peter is a member of the Domain Users group and the HR group. The permissions on the HRResources folder are shown in the following table.

Group	Permission	Type of permission
Domain Users	Read	Share
HR	Change	Share
Domain Users	Read	NTFS
HR	Modify	NTFS

A.Set the hidden and system attributes on Handbook.doc.
B.Disable permissions inheritance on Handbook.doc.
C.Assign Peter the Allow - Read permission for Handbook.doc.
D.Assign Peter the Deny - Write NTFS permission for Handbook.doc.

Correct:D

2.You are the desktop administrator for your company. Each of the company's desktop computers has been upgraded from Windows NT Workstation 4.0 to Windows 2000 Professional. The hard disk on each computer has one NTFS partition. One of the desktop computers has an application that stores its large data files on drive C. Recently the user of this computer has been running out of disk space on drive C. However, the computer's hard disk still contains unallocated space. You need to increase available disk space on drive C on this computer. What should you do?

A.Create a partition by using unallocated space, and configure this partition as a mount point on drive C.
B.Create a stripe set that includes unallocated space and drive C.
C.Upgrade the hard disk from a basic disk to a dynamic disk.
D.Extend drive C by using unallocated space.

Correct:A

3.You are a network administrator for your company. The company has 10 branch offices and has plans to add at least 25 more branch offices during the next 12 months. The network is configured as shown in the exhibit. (Click the Exhibit button.) Each branch office has only one server. These servers are multifunction servers that are domain controllers and application-based Terminal servers. The users of the remote client computers connect to these servers by using Terminal Services over the Internet so that they can access a financial application. You need to ensure that remote users can log on to the Terminal servers and not to any other domain controllers at the main office. You must also ensure that remote users cannot log on to any other domain controller that is not an application-based Terminal server. When new application-based Terminal servers are added to the domain, you want the servers to automatically configure settings to meet these requirements. You create a new group named Terminal-Server-Users, and you make the user accounts of all the users who need access to these application-based Terminal servers members of this group. What should you do next?

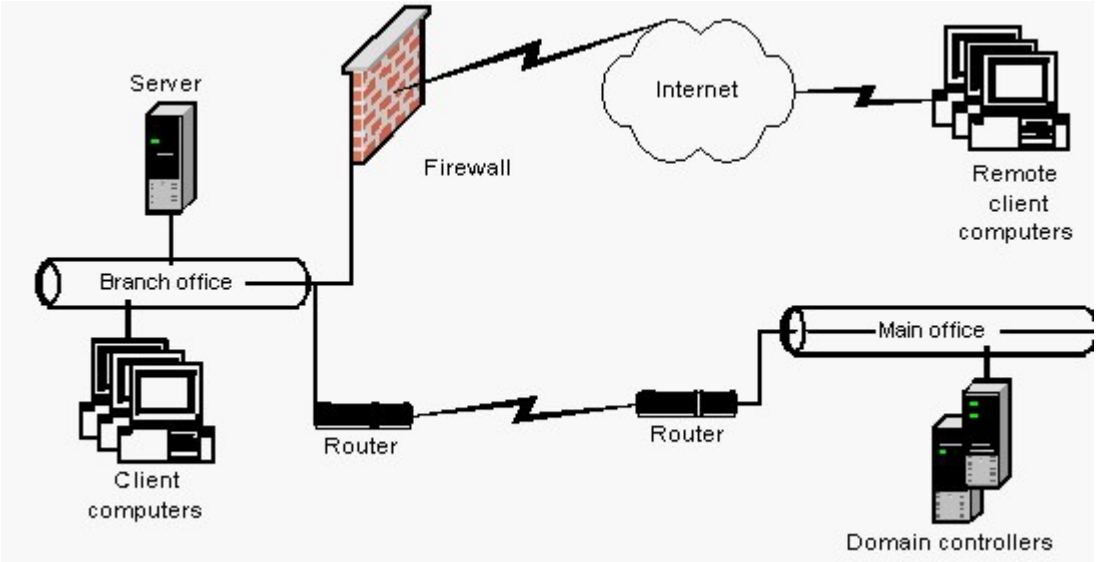

A.Create a new Group Policy object (GPO) and link it to the domain level. Configure this GPO by assigning the Terminal-Server-Users group the Log on locally right.

B.Create a new Group Policy object (GPO) and link it to the Domain Controllers organizational unit (OU). Configure this GPO by assigning the Terminal-Server-Users group the Log on locally right.

C.Create a new OU and move all Terminal servers into this organizational unit (OU). Create a Group Policy object (GPO) and link it to this new OU. Configure this GPO by assigning the Terminal-Server-Users group the Log on locally right.

D.Modify the local security policy on all of the application-based Terminal servers by assigning the Terminal-Server-Users group the Log on locally right.

E.Modify the Domain Controller security policy on one of the application-based Terminal servers by assigning the Terminal-Server-Users group the Log on locally right.

Correct:C

4.You are the network administrator for your company. The network contains a Windows 2000 Server computer named ServerA, which runs Internet Information Services (IIS). The network also contains a DNS server. The default Web site is the only Web site on ServerA. Company employees access the default Web site by using the URL http://servera. The manager of the marketing department asks you to create a new Web site. The new Web site will be used to publish information about marketing projects. The manager wants all company employees to be able to access the new Web site by using a URL. You create a new Web site named Marketing on ServerA, and you use the default settings. However, when you try to start the new Web site, you receive the following error message: "The service could not be started because it is not correctly configured." You verify that the default Web site is functioning correctly. You need to start the Marketing Web site and ensure that company employees can access the Marketing Web site by using a URL. You also need to ensure that the default Web site continues to function correctly. What should you do?

A.On ServerA, stop and restart the World Wide Web Publishing service. Then, start the Marketing Web site and the default Web site. Instruct company employees to access the Marketing Web site by using the URL http://marketing.

B.On ServerA, add an additional IP address to ServerA's TCP/IP configuration. Configure the Marketing Web site to use only the new IP address. Instruct company employees to access the Marketing Web site

by using the URL http://marketing.
C.On ServerA, configure the Marketing Web site to use a host header named Marketing. On the company's DNS server, create a CNAME (canonical name) record for a host named Marketing that points to ServerA's IP address. Instruct company employees to access the Marketing Web site by using the URL http://marketing.
D.On ServerA, configure the Marketing Web site to use port 81. On the company's DNS server, create a CNAME (canonical name) record for a host named Marketing that points to ServerA's IP address. Instruct company employees to access the Marketing Web site by using the URL http://marketing.
Correct:C

5.You are the administrator of a Windows 2000 file server named ServerA. ServerA is a member server in a Windows 2000 domain. You create a folder named H:\EmployeeHandbook on a volume that is formatted as NTFS. You share the folder as EmployeeHandbook$. You want users of Windows 2000 Professional computers to be able to search the network for the share by name. You want the users to be able to find the share without needing to know the name of the server. What should you do?
A.Run the net share EmployeeHandbook$ command on a domain controller.
B.Publish the share in Active Directory by using Active Directory Users and Computers.
C.Run the dcpromo command on ServerA.
D.Create a virtual directory for the folder with an alias of EmployeeHandbook.
Correct:B

6.You are the administrator of a Windows 2000 file and Web server named ServerA. ServerA is a member of a Windows 2000 domain. A folder on ServerA named I:\Data\Accounting_vacation_requests is shared as AcctVac with default NTFS and share permissions. Users in the domain local group named AcctGrp save vacation requests as Microsoft Word documents to AcctVac by using a mapped drive. You want other users in the domain to be able to view the vacation requests by using the URL http://ServerA/Vacation. What should you do?
A.Rename the folder to I:\Data\Vacation. Modify NTFS permissions for the folder to assign the Everyone group the Allow - Read permission and to assign the AcctGrp group the Allow - Full Control permission.
B.Create a new share named Vacation for the folder. Modify NTFS permissions for the folder to assign the Everyone group the Allow - Read permission and to assign the AcctGrp group the Allow - Full Control permission.
C.Configure the folder as a virtual directory with the alias of Vacation. Assign the Read and the Directory browsing access permissions for the virtual directory.
D.Create a new Web site named Vacation on ServerA. Create a virtual directory with the default settings in the new Web site.
Correct:C

7.You are the administrator of a Windows 2000 file server named ServerA. ServerA is a member of a Windows 2000 domain. A folder on ServerA named I:\Data\LimitedPublic is shared as LimPub. NTFS and share permissions are configured as shown in the following table.

Folder	Share name	Share permission	NTFS permission for folders and files
I:\Data\LimitedPublic	LimPub	Everyone - Read	Everyone - Full Control

A.Configure share permissions to assign the Everyone group the Allow - Change permission. Configure NTFS permissions for the folder to assign the Everyone group the Allow - Write permission and to assign the Creator Owner group the Allow - Full Control permission.
B.Configure share permissions to assign the Everyone group the Allow - Change permission. Configure NTFS permissions for the folder to assign the Everyone group the Allow - Create Files/Write Data permission and to assign the Creator Owner group the Allow - Full Control permission.
C.Configure share permissions to assign the Everyone group the Allow - Full Control permission. Configure NTFS folder permissions for the folder to assign the Everyone group the Allow - Create Files/Write Data permission and to assign the Creator Owner group the Allow - Full Control permission.
D.Configure share permissions to assign the Everyone group the Allow - Full Control permission. Configure NTFS folder permissions for the folder to assign the Everyone group the Deny - Read permission and to assign the Creator Owner group the Allow - Full Control permission.

Correct:C

8.You are the administrator of your company's Windows 2000 file servers. There are 200 users in the company. A file server named ServerA functions as a file and print server. ServerA has a single partition that stores home folders and other shared user data. You configure quotas for all users' home folders. After you configure quotas on ServerA, users report that they are being prevented from creating new files in their home folders even though their home folders do not exceed the quota limit. You need to enforce quota limits based only on home folder usage. You need to accomplish this task with the least amount of administrative effort. What should you do?

A.Place all of the home folders on a single, separate partition and configure quotas on the new partition.
B.Create a unique partition for each user's individual home folder and configure quotas on each partition.
C.Assign the users the Allow - Take Ownership permission for their home folders and then instruct the users to take ownership of their home folders.
D.Create a quota entry for each individual user.
E.Share each home folder separately.

Correct:A

9.You are a domain administrator for your company. The network consists of a single Windows 2000 domain. All client computers run Windows 2000 Professional. Each department has its own organizational unit (OU) structure. Each department has departmental administrators who are responsible for the administration of the OU structure. Top-level departmental OUs are created by the domain administrators, and the departmental administrators are delegated full control of these OUs. Child OUs are created by the departmental administrators as necessary. The departmental administrator for the finance department is out of the office. The manager of the finance department asks you to publish a shared folder named FinanceDocs on a server named ServerA to Active Directory so that users can easily find the folder. When you attempt to create the shared folder in the Finance OU, you receive the following error message.

A.Assign the Domain Admins group the Allow - Full Control share permission for FinanceDocs.
B.Assign the Domain Admins group the Allow - Read & Execute NTFS permission for FinanceDocs.
C.Assign the Domain Admins group the Allow - Create Child Objects permission for the Finance OU.
D.Assign the Domain Admins group the Allow - Modify Owner permission for the Finance OU and then take ownership.

Correct:C

10.You are a system administrator for your company. The network contains a Windows 2000 Server computer named ServerA. You connect a new laser print device to ServerA on the LPT1 port. You configure a printer named Laser1 with the default permissions, and you share the printer as Laser1. Users in a branch office submit large print jobs to Laser1. These print jobs occasionally delay higher priority print jobs that are submitted by users in the main office. Maria is the manager of the users in the branch office. Maria controls which users in the branch office are allowed to print to Laser1. You find out that Maria is deleting the print jobs that are submitted by the users in the branch office to enable the higher priority print jobs to print faster. You want to ensure that Maria can control only user access to Laser1. What should you do?

A.Add Maria to the Print Operators group on ServerA.
B.Assign Maria the Manage Printers permission for Laser1.
C.Ensure that the priority level of Laser1 is set to 99 on the Advanced tab of Laser1.
D.Run the Delegation of Control wizard and assign Maria the Read permission for Laser1.

Correct:B

11.You are the network administrator for one of your company's branch offices. All of the company's file servers have indexing enabled, with the default values. A user named Maria is responsible for document archiving and retrieval. Maria must log the files as she archives them. A new partition has been created on one of the file servers for archiving and retrieval. A portion of the drive space on this partition is used for other purposes. A shared folder has been created on the partition. Users place files to be archived in this shared folder. Maria logs the appropriate files and moves them to a compressed folder on the partition. The folder is named Archive . A portion of the contents of the Archive folder is shown in the exhibit. (Click the Exhibit button.) Maria has Read and Modify permissions for the Archive folder. The files are backed up on tape and the tape is stored off site. Maria reports that she is running out of space on the partition. You will not be able to purchase hardware during the next three months. You need to free up space on the partition. What should you do?

Name	Size	Type	Modified	Attributes
1st Quarter In...	55 KB	Microsoft Excel Wor...	11/30/2001 1:57 PM	A
1st Quarter S...	60 KB	Microsoft Excel Wor...	11/30/2001 1:58 PM	AC
2nd Quarter I...	64 KB	Microsoft Excel Wor...	11/30/2001 1:58 PM	AC
2nd Quarter S...	57 KB	Microsoft Excel Wor...	11/30/2001 1:58 PM	A
ClientA Proposal	53 KB	Microsoft Word Doc...	11/30/2001 1:53 PM	AC
ClientA Vision ...	220 KB	Microsoft Word Doc...	11/30/2001 1:51 PM	A
ClientB Inform...	50 KB	Microsoft Word Doc...	12/17/1996 2:15 PM	AC
ClientB Vision ...	228 KB	Microsoft Word Doc...	11/30/2001 1:51 PM	A
ClientC Inform...	19 KB	Microsoft Word Doc...	12/16/1996 8:43 AM	AC
ClientC RFP	89 KB	Microsoft Word Doc...	11/30/2001 1:53 PM	A
DeptInfo	31 KB	Microsoft Excel Wor...	5/26/1999 3:45 PM	A
Quarterly Goal...	41 KB	Microsoft Word Doc...	12/26/1996 11:49 AM	AC

A.Enable offline caching of files on the partition.
B.Disable indexing of the partition.
C.Configure a scheduled task to defragment the partition on a weekly basis.
D.Configure a scheduled task to compress the files on the partition on a nightly basis.
Correct:D

12.You are the administrator of a Windows 2000 file server named ServerA. ServerA is a member of a Windows 2000 domain. On a volume that is formatted as NTFS, you create and share folders for the sales department. Managers in the sales department need to read and modify files in all of the department's folders. Users named Peter, Maria, and Marc need to read files in the G:\Sales\Reports folder, and they need full control of files in their personal folders. You configure folder and share permissions as shown in the following table.

Folder	Share name	Share permission	NTFS permission for folders and files
G:\Sales	Sales	Managers - Full Control	Managers - Full Control
G:\Sales\Reports	Reports	Everyone - Read	Managers - Full Control Everyone - Read
G:\Sales\Reports\Peter	Peter$	Peter - Full Control	Managers - Full Control Peter - Full Control
G:\Sales\Reports\Maria	Maria$	Maria - Full Control	Managers - Full Control Maria - Full Control
G:\Sales\Reports\Marc	Marc$	Marc - Full Control	Managers - Full Control Marc - Full Control

A.Instruct the users in the Managers group to access the files by using the Sales share.
B.Assign the Managers group the Allow - Full Control permission for the Marc$ share.
C.Re-create the Marc$ share as Marc.
D.Ensure that the Managers group has the Allow - Full Control permission for the published share object in Active Directory that is associated with the Sales share.
Correct:A

13.You are a domain administrator for your company. You are installing a new Windows 2000 Server computer named ServerA, which has Internet Information Services (IIS) installed. You want to use ServerA to provide a corporate intranet site to your employees. You create a Web site on ServerA. You want to enable users to access the intranet site by using the URL http://CLInfo. You want to accomplish this task with the least amount of administrative effort. Which two actions should you take? (Each correct answer presents part of the solution. Choose two.)
A.Create a DNS entry for CLInfo that specifies the TCP/IP address of ServerA.
B.Create a WINS entry for CLInfo that specifies the TCP/IP address of ServerA.
C.Create a Hosts file entry for CLInfo that specifies the TCP/IP address of ServerA. Then copy the Hosts file to each network computer.
D.Create the CLInfo Web site as a virtual directory.
E.Configure host headers on ServerA to include CLInfo.
Correct:A E

14.You are the administrator of a Windows 2000 Server computer in your company's accounting

department. The server runs Terminal Services in application mode. All users in the accounting department run their business applications in Terminal Services sessions. A manager in the accounting department runs an application on the server. The application requires three hours to process financial and accounting data. This application must be run every Friday morning so that the data will be available to the director of accounting by 5:00 P.M. Friday afternoon. Users in the accounting department report that when this application is running, the performance of other business applications is significantly slower. You need to allow the accounting application to run with the least amount of performance impact on the other business applications. What should you do?

A.Configure all other business applications to have High priority.

B.Configure all other business applications to have RealTime priority.

C.Configure the accounting application to have AboveNormal priority.

D.Configure the accounting application to have BelowNormal priority.

Correct:D

15.You are a network administrator for your company. A new company policy requires that new server installations include the most recent service pack. Company executives plan 100 new server installations during the next three months. You need to deploy the new servers with the least amount of administrative effort. What should you do?

A.When each new computer is delivered, install Windows 2000 Server on it. Then run the update.exe command from the service pack CD-ROM.

B.When each new computer is delivered, install Windows 2000 Server on it. Then run the setup.exe command from the service pack CD-ROM.

C.When the first new computer is delivered, install Windows 2000 Server on it. On drive C, create a folder named Win2000 and copy the contents of the Windows 2000 Server CD-ROM into this folder. Run the update.exe -s:c:\Win2000 command from the service pack CD-ROM. Create a new installation CD-ROM that contains the contents of the Win2000 folder, and use this CD-ROM for all subsequent new server installations.

D.Install Windows 2000 Server on an existing server. On drive C, create a folder named i386 and copy the contents of the Windows 2000 Server CD-ROM into this folder. Run the setup.exe -s:c:\i386 command from the service pack CD-ROM. Create a new installation CD-ROM that contains the contents of this folder, and use this CD-ROM for all subsequent new server installations.

Correct:C

16.You are a network administrator for your company. A user named Maria reports that her Windows 2000 Professional computer has stopped responding. You examine the computer and discover that it is displaying a STOP message. Maria reports that the computer has been displaying a STOP message intermittently during the past several days. You restart the computer and it functions normally. A few minutes later, Maria reports that the computer has stopped responding again. You investigate and discover the same STOP message. The documentation for Maria's computer indicates that a new network adapter card was installed in the computer 10 days ago. You set up a second Windows 2000 Professional computer for Maria to use. You need to provide access to her original computer so that she can copy three files onto a floppy disk and copy them to the second computer. However, when you restart her original computer, it displays a STOP message after only a few minutes. You need to provide Maria with access to the files on her original computer. You need to accomplish this task as quickly as possible. What should you do?

A.Restart the original computer by using safe mode.
B.Restart the original computer by using the last known good configuration.
C.Restart the original computer by using an Emergency Repair Disk.
D.Restart the original computer by using the Windows 2000 Professional CD-ROM, and select the option to repair the installation.

Correct:A

17.You are a network administrator for your company. You are installing Windows 2000 Advanced Server on a new computer. The server contains two PCI network adapters and a PCI video adapter. The server's motherboard has a built-in dual-channel SCSI adapter that hosts several devices, as shown in the following table.

SCSI adapter function ID	SCSI adapter device ID	Attached SCSI device	SCSI device ID
0	14	Hard disk	0
0	14	Hard disk	1
0	14	Hard disk	2
0	14	Hard disk	3
1	14	Removable disk cartridge drive	0
1	14	Tape backup device	1
1	14	CD-ROM drive	2

A.Reconfigure the second SCSI adapter to have a SCSI device ID of 7.
B.Reconfigure the removable disk cartridge drive to have a SCSI device ID of 4.
C.Reserve an IRQ for each SCSI adapter in the system BIOS.
D.Restart setup and install the driver for the SCSI adapter during the initial file copy.
E.Configure the system BIOS boot device option to boot from the SCSI hard drive.

Correct:D

18.You are the network administrator for your company's New York branch office. You receive three new Windows 2000 Server computers from the main office. Each new server contains a single hard disk, which is configured as a single NTFS logical volume. You want to ensure that you can continue to access the NTFS volume on each server in the event that Windows 2000 Server fails to start. You want to be able to access each volume without having to start the server from a CD-ROM or a floppy disk. What should you do on each server?

A.Ensure that the Everyone group has the Allow - Full Control permission for the root folder of the hard disk.
B.Copy the i386 folder from the Windows 2000 Server CD-ROM to the folder named \Windows\Options on the hard disk.
C.Place your domain user account in the local Administrators group.
D.Run the winnt32.exe /cmdcons command from the Windows 2000 Server CD-ROM.

Correct:D

19.You are a network administrator for your company. Company executives plan to deploy 25 new Windows 2000 member servers and 25 new Windows 2000 domain controllers. All Active Directory server accounts are in the default locations. You need to install 20 hot fixes as part of the

operating system installation on the new computers. The hot fixes must not be installed on any current Windows 2000 Server computers. You create a distribution folder for the hot fixes. What should you do next?

A.Use Setup Manager to create an answer file that will run a script to install the hot fixes from the distribution folder during setup.

B.Use Setup Manager to create an answer file. Add lines in the Cmdlines.txt file to install the hot fixes from the distribution folder during setup.

C.Create a script that will install all of the hot fixes automatically. Configure a Group Policy object (GPO) and link it to the domain level to run this script on startup.

D.Create a Group Policy object (GPO) and link it to the Domain Controllers OU and to the Computers container. Configure the GPO to assign the hot fixes as assigned applications.

Correct:B

20.You are the network administrator for your company's branch office. You receive a memo from the main office indicating that a new custom software application will be deployed to the Windows 2000 Professional computers in your office that evening. The following morning, the users in your office report that their computers will not start. Each computer stops responding at the Windows 2000 Professional logon screen. You contact the main office and the application's developers inform you that the new application includes a service named Data Listener. They discovered a problem with the service that is preventing the client computers in your office from starting. The programmers at the main office will attempt to correct the problem. Until the problem is corrected, you need to allow your users to start their client computers normally and to access network resources. You need to accomplish this task as quickly as possible. What should you do on each client computer?

A.Restart the computer by using safe mode.

B.Restart the computer by using a startup floppy disk, and run the fixmbr command.

C.Restart the computer by using the Recovery Console. Run the disable "Data Listener" command.

D.Restart the computer by using the Windows 2000 Professional CD-ROM, and select the option to repair the installation.

Correct:C