EXAMGOOD

QUESTION & ANSWER

Exam Good provides update free of charge in one year!

Accurate study guides

High passing rate!

http://www.examgood.com

Exam : **920-462**

Title : ncse-ethernet switching (baystack/bps/8600) exam

Version : DEMO

1. A stock trading firm has just installed a server for online trading. Once a customer requests a stock trade via the Internet, the server must interface with the Stock Exchange via their Passport network, using a protocol which supports authentication, encryption and integrity assurance. Which supported protocol is appropriate for the Passport configuration?

A. RADIUS Client

B. RADIUS Server

C. Secure Shell (SSH) Client

D. Secure Shell (SSH) Server
Answer: D

2. A customer with a Passport 8300 switch is configuring Remote Access Dial-In User Services (RADIUS) to provide a high degree of security against unauthorized access to the switch. They configured ten RADIUS servers on the client (Passport 8300 switch). What will happen if an authentication request is rejected by the first of five RADIUS servers configured on the switch?

A. Local authentication is made on the switch itself.

B. No local authentication is made on the switch itself.

C. If the first server is unavailable, the Passport 8300 tries the second and so on until it establishes a successful connection.

D. If the first server rejects the authentication request, the Passport 8300 tries the second and so on until it establishes a successful connection. If all of them reject the request, local authentication is made on the switch itself.
Answer: B

3. A customer wants to configure SNMPv3 on the Passport 8300 switch. SNMPv3 requires a oadable?module for the encryption libraries. What A customer wants to configure SNMPv3 on the Passport 8300 switch. SNMPv3 requires a ?oadable?module for the encryption libraries. What does this module contain and how must you modify the config file to load this module?

A. The module contains keycode and the string oad-module KEY/flash/<key_filename>?must be inserted in config file The module contains keycode and the string ?oad-module KEY/flash/<key_filename>?must be inserted in config file

B. The module contains SSH algorithm and the string oad-module SSH/flash/<ssh_filename>?must be inserted in config file The module contains SSH algorithm and the string ?oad-module SSH/flash/<ssh_filename>?must be inserted in config file

C. The module contains DES algorithm and the string oad-module DES/flash/<des_filename>?must be inserted in config file The module contains DES algorithm and the string ?oad-module DES/flash/<des_filename>?must be inserted in config file

D. The module contains license algorithm and the string icense-module DES/flash/<des_filename>?must be inserted in config file The module contains license algorithm and the string ?icense-module DES/flash/<des_filename>?must be inserted in config file
Answer: C

4. Click on the exhibit button. Instead of using IP policies and with no router attached to VLAN 2, the following command will enable RIP on PP8600A adding the local interface to the RTM for RIP: config vlan 2 ip rip enable Which series of commands will optimally complete this type of RIP configuration on PP8600A shown in the exhibit?

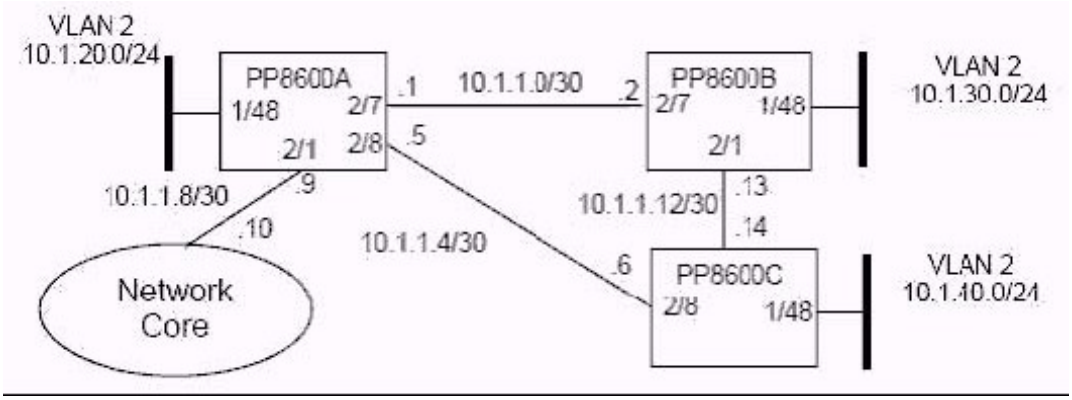

A. config vlan 2 ip rip listen enable

B. config vlan 2 ip rip supply enable

C. config vlan 2 ip rip supply enable config vlan 2 ip rip listen enable

D. config vlan 2 ip rip supply disable config vlan 2 ip rip listen disable
Answer: D

5. Click on the exhibit button. A customer wants to use IP Subnet VLANs to provide routing between VLAN 2 and VLAN 3 connected to the BayStack BPS switch, and configure the core port as a Brouter port with RIP. Assuming that this was done correctly, which portion of the PP8600A configuration file identifies the right Brouter configuration?

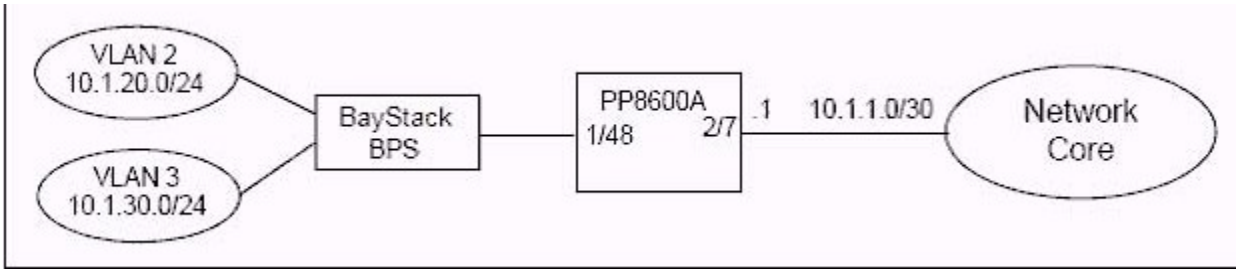

A. ethernet 2/7 ip create 10.1.1.1/255.255.255.252 2090 mac_offset 2 ethernet 2/7 ip rip enable ip rip enable

B. ethernet 2/7 ip create 10.1.20.1/255.255.255.252 2090 mac_offset 2 ethernet 2/7 ip rip enable ip rip enable

C. ethernet 1/48 ip create 10.1.1.1/255.255.255.252 2090 mac_offset 2 ethernet 1/48 ip rip enable ip rip enable

D. ethernet 1/48 ip create 10.1.20.1/255.255.255.252 2090 mac_offset 2 ethernet 1/48 ip rip enable ip rip enable
Answer:A

6. The following commands complete a configuration for traffic filtering on a Passport 8600. missing command config ip traffic-filter global-set 1 add-filter 1 config ethernet 1/2 enable-diffserv true config ethernet 1/2 ip traffic-filter create config ethernet 1/2 ip traffic-filter add set 1 config ethernet 1/2 ip traffic-filter default-action forward config ethernet 1/2 ip traffic-filter enable Step one is missing. Which is the missing command?

A. config ip traffic-filter filter 1 forward equal

B. config ip traffic-filter traffic-profile 1 info

C. config ip traffic-filter global-set 1 create name gfilter1

D. config ip traffic-filter create global src-ip 10.1.1.2/30 dst-ip 172.1.1.29/30 id 1
Answer: C

7. You have created a global filter with the following commands: config ip traffic-filter create source src-ip 10.1.1.1 dst-ip 47.5.5.1 id 3 config ip traffic-filter filter 3 action mode forward config ip traffic-filter set 303 create name estfilter? FRQILJLSWUDIILFILOWHUVHWFUHDWHQDPH ? HVWILOWHU config ip traffic-filter set 303 add-filter 3 config ethernet 1/2 enable-diffserv true config ethernet 1/2 ip traffic-filter create Which command would be used to add the source filter to port 1/2?

A. config ethernet 1/2 ip traffic-filter add set 3

B. config ethernet 1/2 ip traffic-filter add set 303

C. config ethernet 1/2 ip traffic-filter enable set 3

D. config ethernet 1/2 ip traffic-filter add set estfilter?
Answer: B

8. Click on the exhibit button. In the exhibits shown, you are required to setup a filter configuration as follows. Forward all http traffic (TCP port 80) directly to the WEB servers using a forward-to-next hop of 10.1.1.1. Forward all VoIP traffic (UDP port 2300-2363) directly to the VoIP servers using a forward-to-next hop of 10.1.1.14. From the partial list of commands in the exhibit, will this configuration meet the requirements listed above?

```
config ip traffic-filter create destination dst-ip
0.0.0.0/0.0.0.0 src-ip 0.0.0.0/0.0.0.0 id 1
config ip traffic-filter filter 1 action mode
forward-to-next-hop ip-address 10.1.1.1
config ip traffic-filter filter 1 match dst-port 80 dst-option
equal
config ip traffic-filter create destination dst-ip
0.0.0.0/0.0.0.0 src-ip 0.0.0.0/0.0.0.0 id 2
config ip traffic-filter filter 2 action mode forward
config ip traffic-filter filter 2 match dst-port 2300
dst-option less
config ip traffic-filter create destination dst-ip
0.0.0.0/0.0.0.0 src-ip 0.0.0.0/0.0.0.0 id 3
config ip traffic-filter filter 3 action next-hop-forward
ip-address 10.1.1.14
config ip traffic-filter filter 3 match dst-port 2364
dst-option less
```

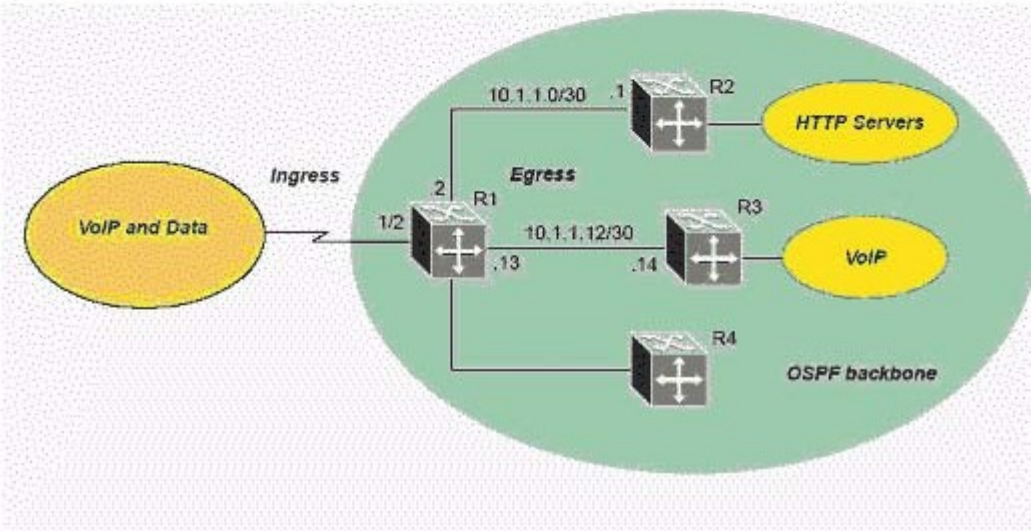

A. No, filter 3 is ranging the wrong UDP ports.

B. No, filter 1 is forwarding to the wrong IP address.

C. No, filter 2 is should be dropping traffic, not forwarding.

D. Yes, this configuration matches the requirements listed above.
Answer: D

9. Click on the exhibit button. For the network configuration exhibit provided, the customer has the following requirements: 1. For a source IP address of 10.1.1.1, set DSCP = CS7 (111000) 2. For all http flows (TCP port = 80), set DSCP = AF31 (011010) 3. For all other traffic, set DSCP = AF11 (001010) 4. Configure the ingress port 1-2 as untrusted 5. Configure the egress ports 1-5 and 1-31 as trusted Based on the customer's requirements and the exhibit, regardless of the ingress VLAN on port 1-2 of the Passport 8600, in what order will the DiffServ DSCP be remarked?

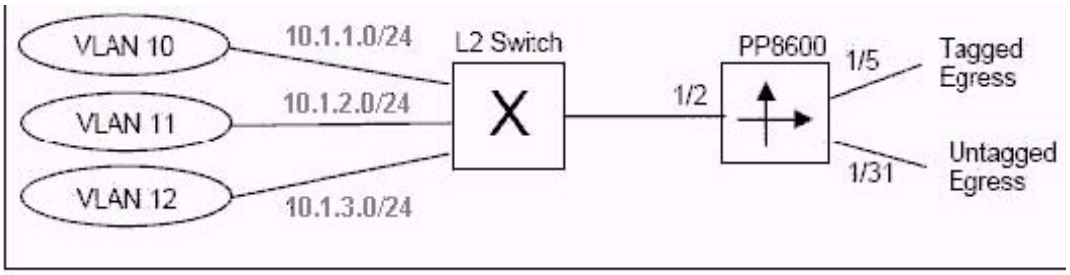

A. AF 11 for all traffic AF31 for traffic from any flow with TCP port number 80 CS7 for traffic from host 10.1.1.1

B. AF 11 for all traffic CS7 for traffic from host 10.1.1.1 AF31 for traffic from any flow with TCP port number 80

C. AF31 for traffic from any flow with TCP port number 80 CS7 for traffic from host 10.1.1.1 AF 11 for other flows

D. CS7 for traffic from host 10.1.1.1 AF31 for traffic from any flow with TCP port number 80 AF 11 for other flows
Answer: D

10. Click on the exhibit button. Which commands will configure the labeled Ethernet ports appropriately?

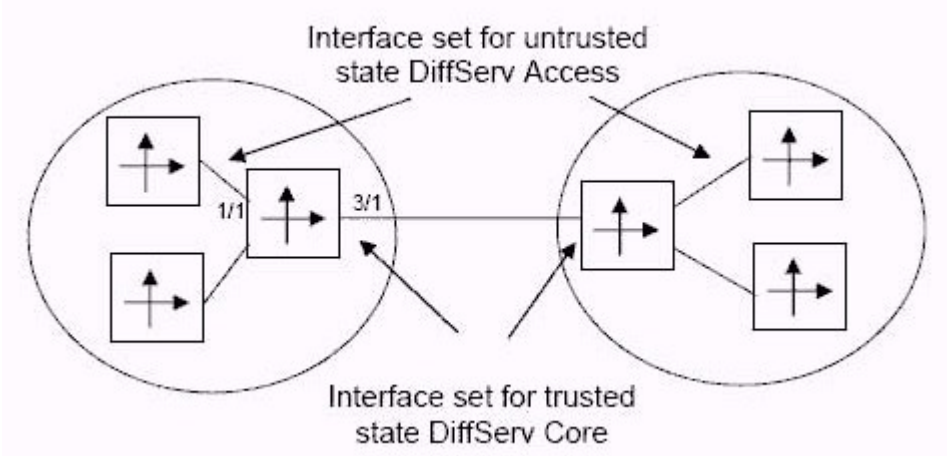

A. config ethernet 3/1 enable-diffserv true config ethernet 1/1 access-diffserv true

B. config ethernet 3/1 enable-diffserv true config ethernet 1/1 access-diffserv false

C. config ethernet 1/1,3/1 enable-diffserv true config ethernet 1/1 access-diffserv true

D. config ethernet 1/1,3/1 enable-diffserv true config ethernet 3/1 access-diffserv true
Answer: C