EXAMGOOD

QUESTION & ANSWER

Exam Good provides update free of charge in one year!

Accurate study guides

High passing rate!

http://www.examgood.com

Exam : **HP0-238**

Title : Supporting the MSA1000 and SCSI JBODS

Version : DEMO

1.Click the Exhibit button. Which LED on the MSA1000 controller indicates a failure on a configured hard disk?

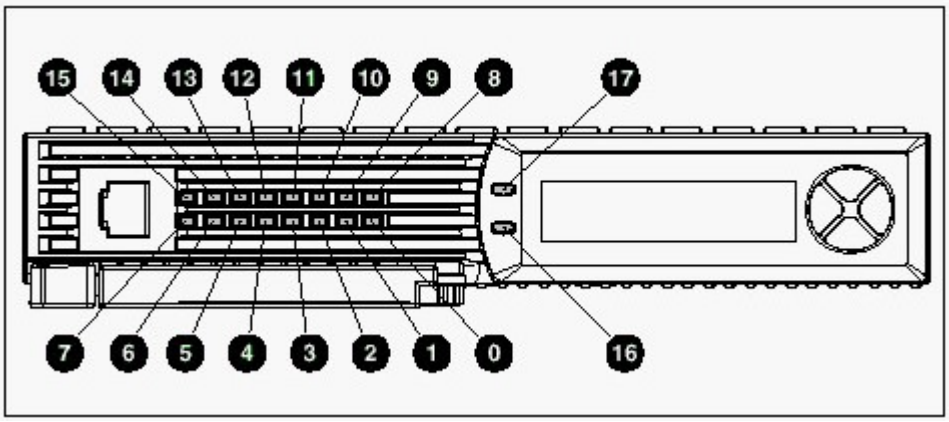

A.LED 9
B.LED 15
C.LED 16
D.LED 17
Correct:B

2.The MSA1000 controller display module can hold up to 100 messages. Once the maximum is reached, the older messages will be ____.

A.copied to the connected host using ACU-XE
B.copied to the connected host using the serial line
C.deleted
D.copied to the connected metadata part of the disks
Correct:C

3.The customer has a single controller MSA1000 configuration. What is the recommended action to replace the failed controller?

A.Power down the MSA1000. Remove the failed controller and install the old cache module in the replacement controller.
B.Push the right arrow push button on the front panel to clear the cache of the controller and replace the failed controller.
C.Replace the failed controller online, with a new cache installed.
D.Push the left arrow push button on the front panel to clear the cache of the controller and replace the failed controller.
Correct:A

4.What is the recommended action to take when a controller fails in a redundant MSA1000 configuration?

A.Power off the MSA1000 and replace the failed controller.
B.Replace the failed controller online.
C.Push the right arrow push button on the front panel to failover the controller and replace the failed controller.
D.Modify the zoning so that the MSA1000 is not accessible during the online replacement of the failed controller.
Correct:B

5.Click the Exhibit button. The EMU in a MSA1000 has detected a temperature problem. Which LED of the enclosure status indicators reports the problem and how does the LED display the error condition?

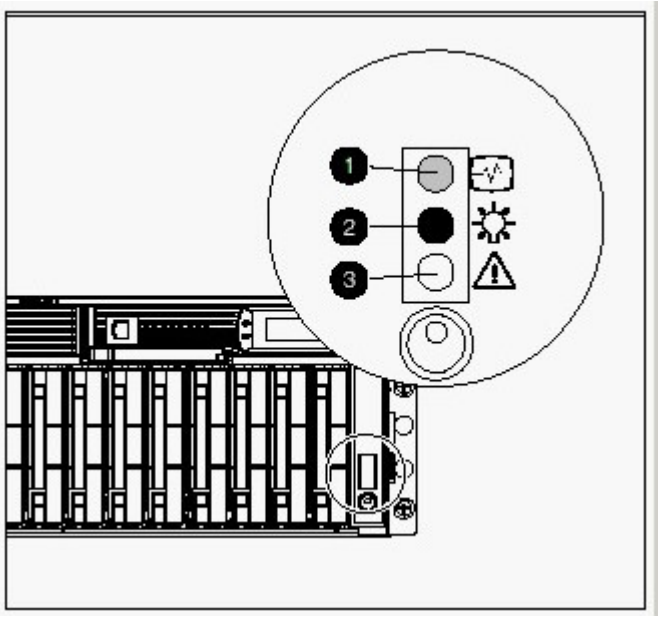

A.LED 1 is off.
B.LED 2 is amber.
C.LED 3 is off.
D.LED 3 is amber.

Correct:D

6.Click the Exhibit button. Which LED on the MSA1000 controller indicates an error message was sent to the controller display?

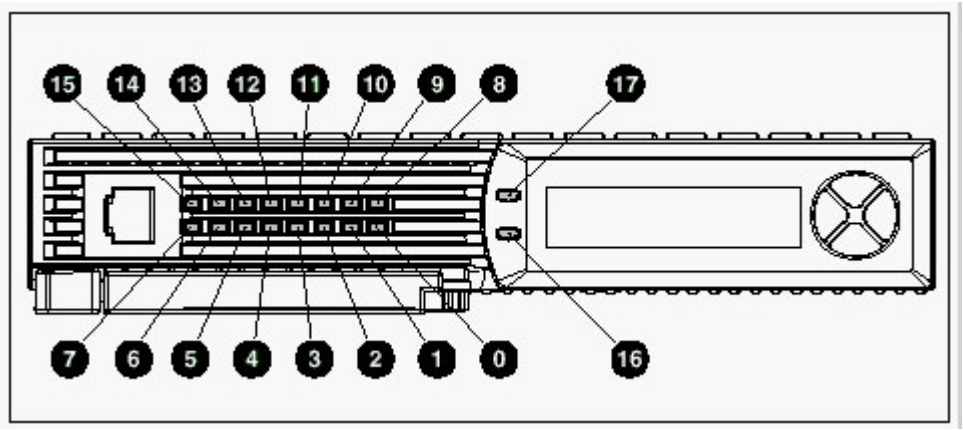

A.LED 9
B.LED 15
C.LED 16
D.LED 17

Correct:D

7.You are assigning DISK109 as a spare drive to array B containing logical drives 2 and 3. What is the correct CLI (command line interface) command?

A.ADD SPARE UNIT=2 DISK109

B.ADD SPARE ARRAY B DISK109
C.SET SPARE ARRAY B DISK109
D.SET SPARE UNIT 3 DISK109
Correct:A

8.Click the Exhibit button. On an MSA1000 disk, LEDs 1 and 2 are OFF, and LED 3 is ON. What is the possible cause for the status and which action should you take?.

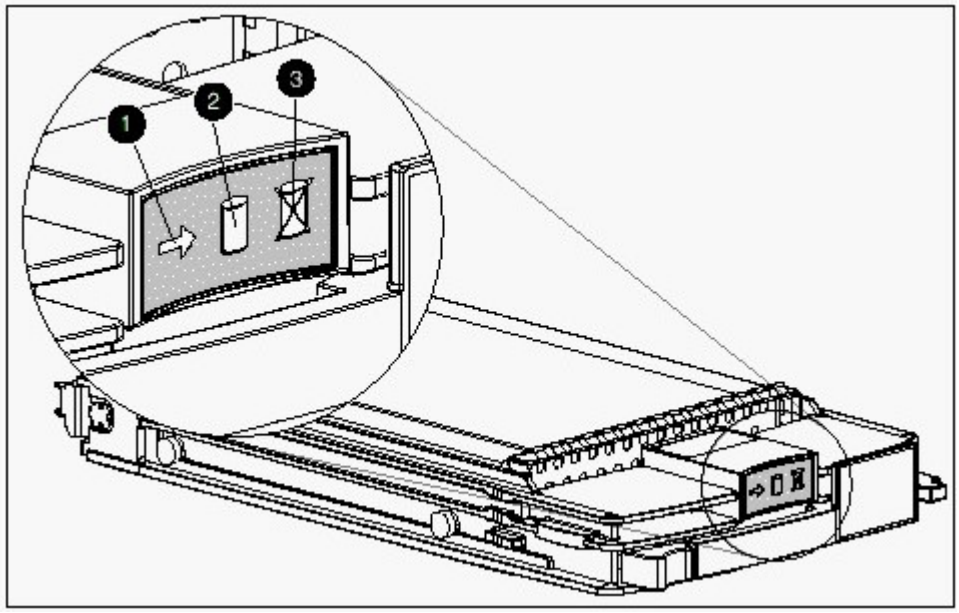

A.The drive is part of the selection of the array configuration utility. Do not remove this drive without verifying the configuration.
B.The array is rebuilding. Do not remove this drive without verifying the configuration.
C.The array is performing an online expansion. Do not remove this drive without verifying the configuration.
D.The drive failed and has been taken offline. You can remove the drive.
Correct:D

9.You are replacing a defective power supply in a redundant MSA1000 configuration. Which statement is correct?

A.Remove the power supply. Note the part number of the unit and order the replacement part. Install the replacement part when it arrives.
B.Power off the MSA1000 during replacement to reduce the risk of personal injury.
C.Replace both power supplies at the same time because they contain the cache battery assembly.
D.Removing a power supply significantly changes the airflow in the cabinet. The remaining power supply will shutdown the array after 5 minutes.
Correct:D

10.The customer has a redundant MSA1000 configuration. Identify the correct statement about replacing an array accelerator (cache) module.

A.The array accelerator modules in both controllers must be the same size.
B.The array accelerator module can be replaced by a larger one. The extra space will not be used.
C.The array accelerator module can be replaced by a smaller one. The cache will be switched off.
D.If you have only different size modules available, you must power off the array during replacement.
Correct:A