EXAMGOOD

QUESTION & ANSWER

Exam Good provides update free of charge in one year!

Accurate study guides

High passing rate!

http://www.examgood.com

Exam : **HP0-450**

Title : OpenVMS v7 Advanced Administration. Performance.and Support

Version : DEMO

1.Which command associates a process or initial thread with a specific processor in an SMP system?

A.SET PROCESS / ASSOCIATION / SET=1

B.SET PROCESS / AFFINITY / SET=1

C.SET PROCESS / CAPABILITY / SET=1

D.SET PROCESS / PERMANENT / SET=1

Correct:B

2.Which performance statistic indicates the HIGHWATER_MARKING disk volume attribute is NOT contributing to the system performance slowdown? Click the Exhibit button.

OpenVMS Monitor Utility
FILE PRIMITIVE STATISTICS on node PLUTO
5-APR-2001 15:54:55.07

	CUR	AVE	MIN	MAX
FCP Call Rate	94.00	45.73	14.39	162.00
Allocation Rate	2.59	1.16	0.00	13.19
Create Rate	3.59	0.88	0.00	5.59
Disk Read Rate	10.80	4.05	0.40	49.00
Disk Write Rate	15.00	5.70	0.20	20.39
Volume Lock Wait Rate	0.00	0.00	0.00	0.00
CPU Tick Rate	5.19	2.62	0.40	8.39
File Sys Page Fault Rate	4.19	2.08	0.00	8.39
Window Turn Rate	32.59	15.34	0.00	48.59
File Lookup Rate	34.00	23.38	5.80	57.79
File Open Rate	66.00	16.80	4.80	66.00
Erase Rate	0.00	0.00	0.00	0.00

A.Create Rate

B.Window Turn Rate

C.Erase Rate

D.Volume Lock Wait Rate

Correct:C

3.Which category from the MONITOR PAGE display indicates a hard page fault?

A.Free List Fault Rate

B.Page Read I/O Rate

C.Modified List Fault Rate

D.Demand Zero Fault Rate

Correct:B

4.The current value of NPAGEDYN is 24,000,000. Installation of a layered product requires nonpaged dynamic memory to be increased by 60,000 bytes. Which command sequence is correct?

A.$ APPEND SYS$SYSTEM: MODPARAMS.DAT SYS$INPUT: ADD_NPAGEDYN=60000 $ @SYS$UPDATE:AUTOGEN SAVPARAMS SETPARAMS Reboot the system

B.$ MCR SYSGEN SYSGEN> SET NPAGEDYN 60000 SYSGEN> EXIT Reboot the system

C.$ MCR SYSMAN SYSMAN> SET ENVIRONMENT/CLUSTER SYSMAN> PARAMETER SET NPAGEDYN 24060000 SYSMAN> PARAMETER WRITE ACTIVE SYSMAN> EXIT

D.$ SET MEMORY/NPAGEDYN=24060000 $ @SYS$UPDATE:AUTOGEN SAVPARAMS SETPARAMS Reboot the system

Correct:A

5.What do these commands accomplish when applied to an indexed file named DATABASE.DAT? $ CONVERT DATABASE.DAT DATABASE.NEW $ RENAME DATABASE.NEW DATABASE.DAT

A.Ensure DATABASE.DAT is contiguous

B.Change the file structure type of DATABASE.DAT

C.Clean up the internal structure of DATABASE.DAT

D.Convert DATABASE.DAT from ASCII format to binary

Correct:C

6.To optimize backup efficiency properly, what has the largest effect on backup performance?

A.backup user account quotas

B.command line specification for /BLOCK_SIZE

C.omitting /CRC and /GROUP_SIZE in the command line

D.using tape devices that support streaming and compaction only

Correct:A

7.SYSMAN commands are not executing as expected in the cluster. When troubleshooting, it is helpful to know that the SMISERVER process is normally in which state?

A.CEF

B.HIB

C.COM

D.CUR

Correct:B

8.Immediately after logging onto the system, the system administrator attempts to add a new user as shown: $ RUN SYS$SYSTEM:AUTHORIZE %UAF-E-NAOFIL, unable to open system authorization file (SYSUAF.DAT) -RMS-E-FNF, file not found Do you want to create a new file? What do the messages indicate?

A.The administrator has insufficient privileges.

B.The system authorization file has been deleted.

C.The system authorization file is corrupt.

D.The logical name SYSUAF is not defined.

Correct:D

9.Which command results in a reliable backup of an active SYSUAF.DAT?

A.$ COPY SYSUAF.DAT SYSUAF.SAVE

B.$ BACKUP/IGNORE=INTERLOCK SYSUAF.DAT SYSUAF.SAVE

C.$ CONVERT/SHARE SYSUAF.DAT SYSUAF.SAVE

D.$ BACKUP SYSUAF.DAT SYSUAF.SAVE

Correct:C

10.What does the GALAXY system parameter do?

A.controls participation of the instance in a GALAXY sharing set

B.defines the number of instances in a hard partition

C.defines the number of CPUs that are assigned to an instance

D.limits the amount of shared memory in a GALAXY community

Correct:A

11.Which task requires the wwidmgr command?
A.Setting up boot or dump devices accessed through a Fibre Channel adapter
B.Setting a preferred path on an HSG controller
C.Controlling the operation of multipath failover
D.Setting the port allocation class in a Fibre Channel device
Correct:A
12.Fast Path is enabled on an SMP system, but all I/O operations appear to be using the primary CPU. Which parameter should be checked?
A.CPU_AFFINITY
B.PREFERRED_CPU
C.PREFERRED_PATH
D.IO_PREFER_CPUS
Correct:D
13.What is the primary function of the Node Synonym in DECnet-Plus?
A.enables back-translation address resolution
B.implements address resolution for DECnet over TCP/IP
C.permits use of DECnet Phase IV style nodename
D.simplifies NCL command files
Correct:C
14.The system manager issues the command: $ SET AUDIT/AUDIT/ENABLE=FILE=FAIL=ALL Where will file access failure audit messages be sent?
A.the operator console
B.the audit journal file
C.the audit journal file and the operator console
D.nowhere, the command syntax is invalid
Correct:B
15.Which command procedure adds a satellite node to an OpenVMS cluster that uses TCP/IP as the networking transport?
A.TCPIP$CONFIG.COM
B.CLUSTER_CONFIG_LAN.COM
C.CLUSTER_CONFIG.COM
D.SYSTARTUP_VMS.COM
Correct:B
16.Which system parameter is used to design a cluster so that a specific node or nodes will master the majority of resource trees?
A.LOCKDIRWT
B.SCSRESPCNT
C.LCKMGR_NODES
D.CLUSTER_CREDITS
Correct:A
17.After installing an FDDI adapter, the system manager activates TCPIP on the interface with the command: TCPIP> SET INTERFACE FF0 /HOST=KESTREL /NETWORK_MASK=255.255.0.0 /BROADCAST_MASK=128.30.0.0 /ARP After the next reboot, TCPIP is not running on the interface. What should have been done to ensure the interface was started automatically when the system

rebooted?

A.Modify TCPIP$SYSTARTUP.COM to configure the interface.

B.Modify VMS$DEVICE_STARTUP.COM to configure the interface.

C.Issue a TCPIP DEFINE INTERFACE command.

D.Issue a TCPIP SET CONFIGURATION INTERFACE command.

Correct:D

18.The customer is using an OpenVMS cluster as shown in this exhibit. The user application is running on ALPHA1 and ALPHA2. Node ALPHA3 exists only as a quorum node. How do you set up the configuration to place all the Cluster Environmental Files so that a user can login, if either ALPHA1 or ALPHA2 fails? Click the Exhibit button.

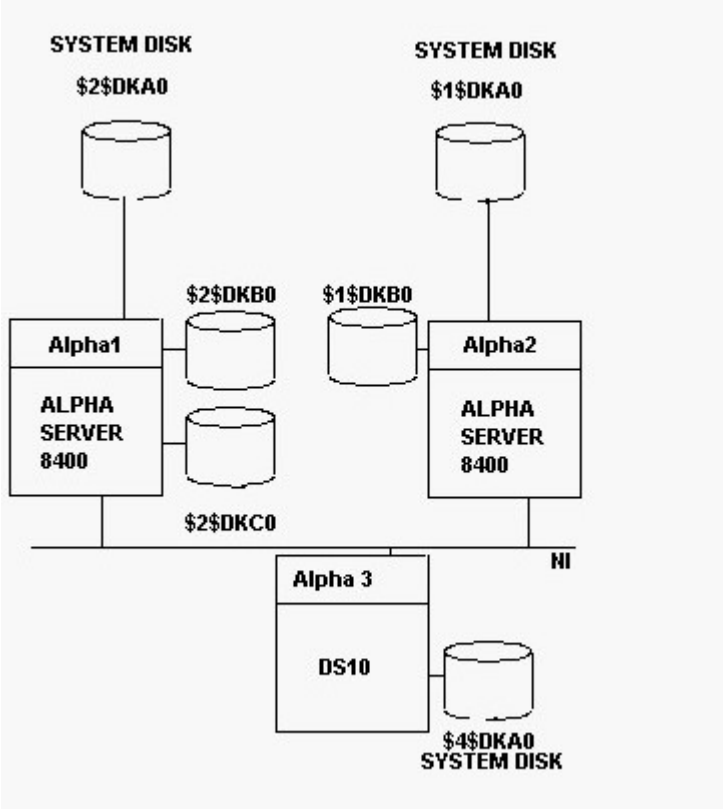

A.Copy Cluster Environmental Files to both system disks 1DKA0 and 2DKA0

B.Build a new shadowset of 1DKB0 and 2DKB0 for the Cluster Environmental Files

C.Place Cluster Environmental Files on a new shadowset 1DKA0 and 2DKC0

D.Build a shadowset of 1DKA0 and 2DKA0 and use it as a common system disk

Correct:B

19.Which system process must be running to automatically find new MSCP served storage devices?

A.IPCACP

B.JOB_CONTROLLER

C.SHADOW_SERVER

D.CONFIGURE

Correct:D

20.The SHOW INTRUSION command returns an error status of SERVERNOTACTIVE. Which system process needs to be restarted?

A.AUDIT_SERVER
B.CLUSTER_SERVER
C.CACHE_SERVER
D.SECURITY_SERVER
Correct:D